Photovoltaic inverter medium frequency furnace

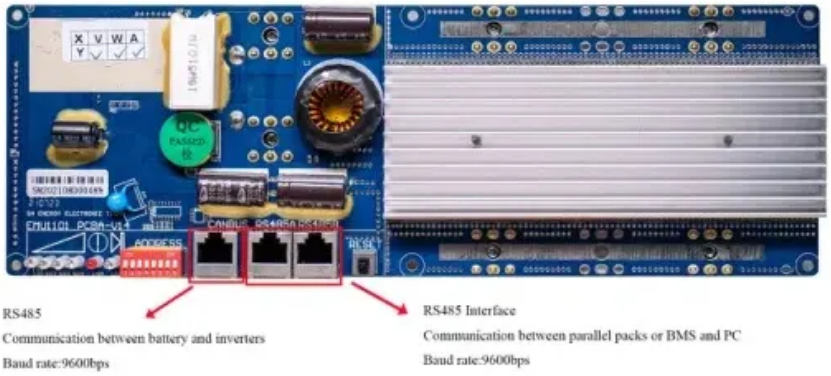

Overview

What is the voltage rating of a solar inverter?

The voltage ratings in distribution generation systems, such as grid integration with small-scale solar PV, will fall into the middle ranges 33, 34. The following attributes of the suggested topology, For an 11-level inverter, it has eight switches. It has 3 DC sources.

What is a 2 kW model of FC 7-level inverter?

A 2 KW model of FC 7-level inverter proposed, the single-phase 240 V inverter is operated at 120,000 Hz the switching frequency applying for renewable and electric bike application. It can be operated at 50 Hz and R-load inverter parameters are verified in half and full load conditions.

Can PV inverters handle higher voltage levels?

By feeding power into the medium-voltage grid, the “MS-LeiKra” project team has demonstrated that PV inverters are technically capable of handling higher voltage levels. The benefits for photovoltaics in-clude enormous cost and resource savings for passive components and cables.

Does solar photovoltaic (PFC) use energy storage devices?

A comprehensive review on PFC with various energy storage devices are analysed. The increasing amount of solar photovoltaic (PV) penetration substitutes a large portion of conventional synchronous power plants.

Is 2 L-VSI a good central inverter for large-scale PV plants?

The 2 L-VSI is currently on the edge of its capability as an optimal solution for the central inverter of large-scale PV plants. To increase converter efficiency, reduce filter size, improve power quality, and be able to fulfill the increasingly demanding grid codes, new central inverter topologies based on 3 L-NPC have been developed (Fig. 6.21).

What is a photovoltaic energy system (PVES)?

Photovoltaic energy systems (PVES) are growing rapidly and worldwide installed capacity reached about 403 GW by the end of 2017 . In terms of cumulative installed capacity, the PVES are the third most important renewable energy sources after hydro and wind energy.

Photovoltaic inverter medium frequency furnace

Primary frequency control techniques for large-scale PV-integrated

A small-signal dynamic model of hybrid micro-grid with a large level of renewable energy penetration is used to analyse the impact of output power fluctuation of PV in [80]. A ...

Modelling of Photovoltaic (PV) Inverter for Power Quality ...

conducted at harmonic frequencies up to the 50th harmonic to obtain impedance-frequency characteristic of each inverter. Interharmonic measurements are also performed to observe if ...

Research on Frequency Domain Characteristics of a Photovoltaic ...

Finally, a PV inverter model is built by MATLAB/Simulink, and the correctness of the theoretical analysis is verified by the Bode diagram from multiple simulations. {Research ...

Multi-port medium-frequency PET topology for integrating photovoltaic ...

This paper introduces a grid-connected topology that combines PV and BS with PET shown in Figure 2 rstly, the proposed PET topology replaces traditional high-frequency ...

Power and Frequency Control of Induction Furnace Using ...

A. The working principle of induction furnace Medium Frequency Induction Furnace is mainly constituted by the furnace, inverter system, electrical control system, cooling system and etc; ...

Harmonic impact of photovoltaic inverter systems on low and medium ...

2010. The installation of distributed generation units in distribution networks will have a significant impact on the system's power quality. This paper aims to analyse the impact of harmonic from ...

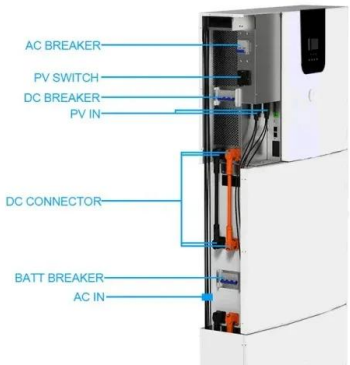

Critical review on various inverter topologies for PV ...

50% lesser weight than a grid-connected inverter with a low-frequency transformer, high efficiency due to the absence of transformer losses, compact, light in weight: demerits: To handle high/medium voltage and/or ...

Power and Frequency Control of Induction Furnace ...

Medium F requency I nduction the necessary waveforms to control the frequency of the inverter through proper design of switching pulses. a six-pulse Induction Furnace with 500 Hz output

Design and Development of a Direct Medium Voltage Solar Pv ...

In a grid-tied photovoltaic (PV) system connected to a medium voltage (MV) grid, an inverter is generally employed with a line frequency transformer (LFT) to connect to the grid. These LFTs ...

Load Banks in Photovoltaic (PV) Inverters

Similar as the application in generators, load banks have some key applications in PV inverters. 1. Power Testing. Load banks are used to conduct power testing of PV inverters to ensure their ability to effectively convert solar energy into AC ...

Contact Us

For catalog requests, pricing, or partnerships, please visit:
https://ssab-proiect.eu