European Solar and Energy Storage Solutions

Photovoltaic project energy storage station construction plan

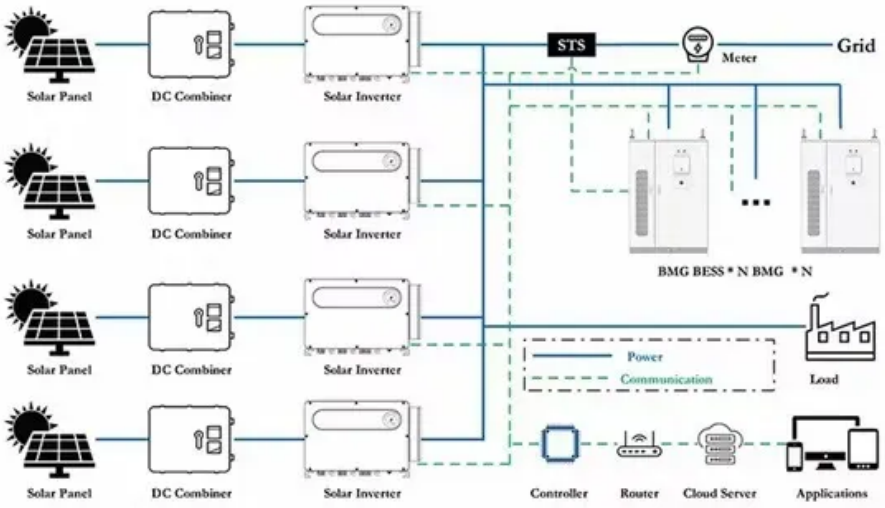

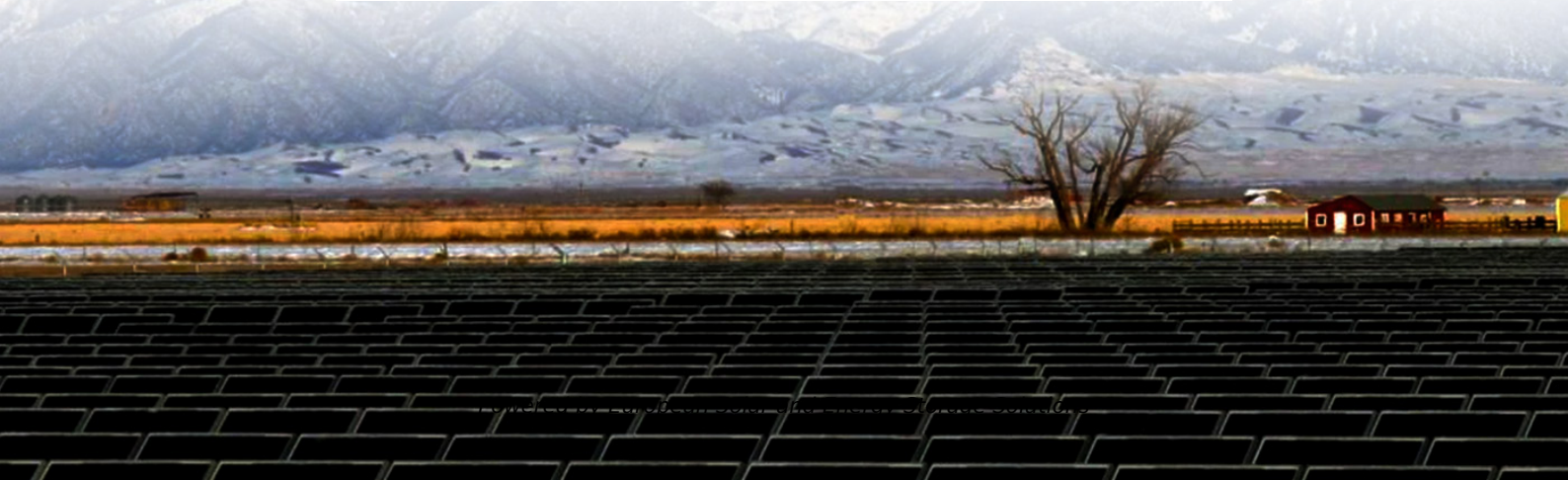

Overview

Can photovoltaic-energy storage-integrated charging stations improve green and low-carbon energy supply systems?

In this study, an evaluation framework for retrofitting traditional electric vehicle charging stations (EVCSs) into photovoltaic-energy storage-integrated charging stations (PV-ES-I CSs) to improve green and low-carbon energy supply systems is proposed.

Where is Qinghai's 'photovoltaic-pastoral storage' project located?

Recently, Qinghai Company's Hainan Base under CHINA Energy in Gonghe County has successfully connected the fourth phase of its 1 million kilowatt 'Photovoltaic-Pastoral Storage' project and the 200,000-kilowatt photovoltaic project to the grid for electricity generation.

Can a PV & energy storage transit system reduce charging costs?

Furthermore, Liu et al. (2023) employed a proxy-based optimization method and determined that compared to traditional charging stations, a novel PV + energy storage transit system can reduce the annual charging cost and carbon emissions for a single bus route by an average of 17.6 % and 8.8 %, respectively.

Are large-scale wind and PV power stations a viable solution to the energy crisis?

Large-scale construction of wind and PV power has become a key strategy for dealing with the energy crisis. However, the variability and uncertainty of large-scale renewable energy power stations pose a series of severe challenges to the power system, such as insufficient peak-shaving capacity and high curtailment rates.

How to calculate energy storage investment cost?

The total investment cost of the energy storage system for each charging

station can be calculated by multiplying the investment cost per kWh of the energy storage system by the capacity of the batteries used for energy storage. Table 4. Actual charging data and first-year PV production capacity data.

What is CHN energy's new photovoltaic base project?

It was constructed in conjunction with the CHN Energy’s East Ningxia 1.5 GW Composite Photovoltaic Base Project, with a planned total capacity of 200 MW/400 MWh.

Photovoltaic project energy storage station construction plan

BESS Basics: Battery Energy Storage Systems for PV-Solar

While not a new technology, energy storage is rapidly gaining traction as a way to provide a stable and consistent supply of renewable energy to the grid. The energy storage system of most ...

Configuration and operation model for integrated ...

Integration of energy storage in wind and photovoltaic stations improves power balance and grid reliability. A two-stage model optimizes configuration and operation, extending storage lifespan from 4

Energy Storage Sizing Optimization for Large-Scale PV Power Plant

The optimal configuration of energy storage capacity is an important issue for large scale solar systems. a strategy for optimal allocation of energy storage is proposed in this paper. First ...

Changzhou Released New Energy Storage Subsidy Plan -- China Energy ...

Changzhou will also promote the construction of integrated demonstration projects of "PV-Storage-Charging-Repair-Swapping Service". 2022 Ministry of Education of ...

PV-Powered Electric Vehicle Charging Stations

o Based on PV and stationary storage energy o Stationary storage charged only by PV o Stationary storage of optimized size o Stationary storage power limited at 7 kW (for both fast and slow ...

New Zealand government plans to invest in the construction of ...

After completion, the project will be the country's first utility scale photovoltaic power station. The 90 hectare Lauriston photovoltaic power station purchased from Hive Energy, a British ...

Simulation test of 50 MW grid-connected "Photovoltaic+Energy storage

When estimating the cost of the "photovoltaic + energy storage" system in this project, since the construction of the power station is based on the original site of the existing ...

World's largest compressed air energy storage ...

Zhongchu Guoneng Technology Co., Ltd. (ZCGN) has switched on the world's largest compressed air energy storage project in China. The $207.8 million energy storage power station has a capacity of

Construction Begins on China's First Grid-Level Flywheel Energy Storage

This project represents China's first grid-level flywheel energy storage frequency regulation power station and is a key project in Shanxi Province, serving as one of the initial ...

Solar photovoltaic (PV) power plant: construction under EPC ...

Today photovoltaic power stations dominate the field of renewable energy, and PV projects and technology is rapidly changing the landscape of the global energy sector: EPC contracting and ...

Allocation method of coupled PV-energy ...

An optimal planning strategy for PV-energy storage-charging station (PV-ES-CS) in hybrid AC/DC distribution networks considering normal operation conditions and resilience under extreme events is pro

Legal Issues on the Construction of Energy Storage Projects for ...

To facilitate the progress of energy storage projects, national and local governments have introduced a range of incentive policies. For example, the "Action Plan for Standardization ...

(PDF) A holistic assessment of the photovoltaic ...

The photovoltaic-energy storage-integrated charging station (PV-ES-I CS), as an emerging electric vehicle (EV) charging infrastructure, plays a crucial role in carbon reduction and alleviating

Construction begins on massive solar-plus-storage project in China - pv

China's Three Gorges New Energy has started building the first 1 GW phase of solar-plus-storage capacity for a planned 16 GW mega-project in Inner Mongolia's Kubuqi ...

Contact Us

For catalog requests, pricing, or partnerships, please visit:
https://ssab-proiect.eu